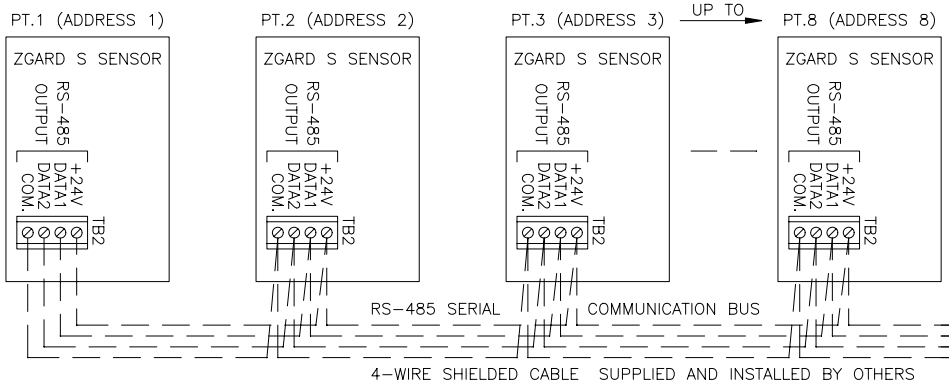

FOR DAISY-CHAIN (SERIES) WIRING OF ZGARD S SENSORS TO THE ZGARD C8P CONTROLLER AS SHOWN HERE, EACH SENSOR MUST BE UNIQUELY ADDRESSED VIA JUMPERS ON SENSOR CIRCUIT BOARD.

CABLE LENGTH VS. SIZE (AWG#)				
CABLE LENGTH FEET	No. OF SENSORS	4	6	8
1 TO 500	AWG #	22	22	22
501 TO 1,000	AWG #	22	20	20
1,001 TO 1,500	AWG #	20	18	18
1,501 TO 2000	AWG #	18	16	16

SUGGESTED CABLE	
GAUGE (AWG#)	4-WIRE SHIELDED CABLE
22	ALPHA WIRE 5504
20	ALPHA WIRE 5514
18	ALPHA WIRE 5524
16	ALPHA WIRE 5534

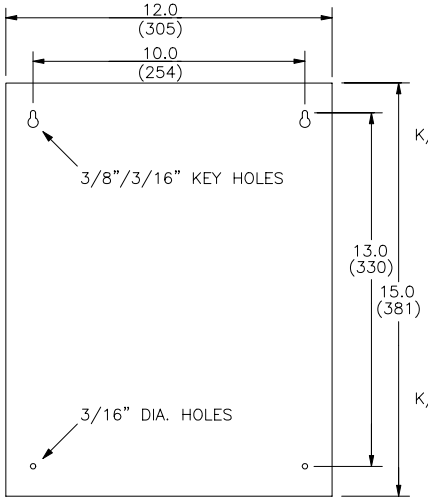

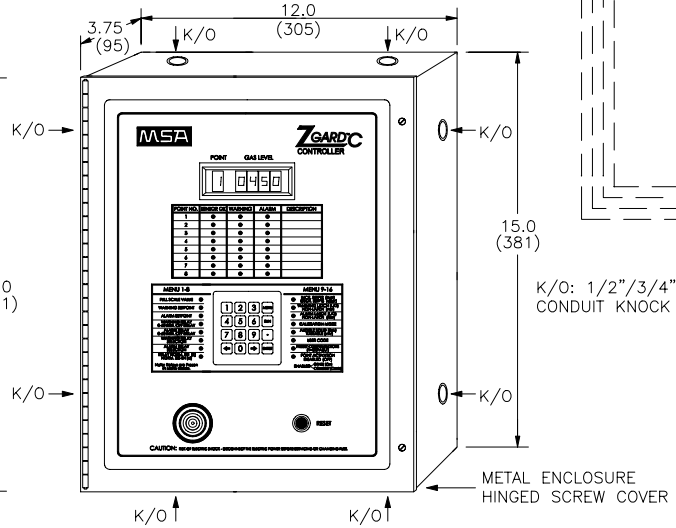

K/O: 1/2"/3/4" CONDUIT KNOCK OUT

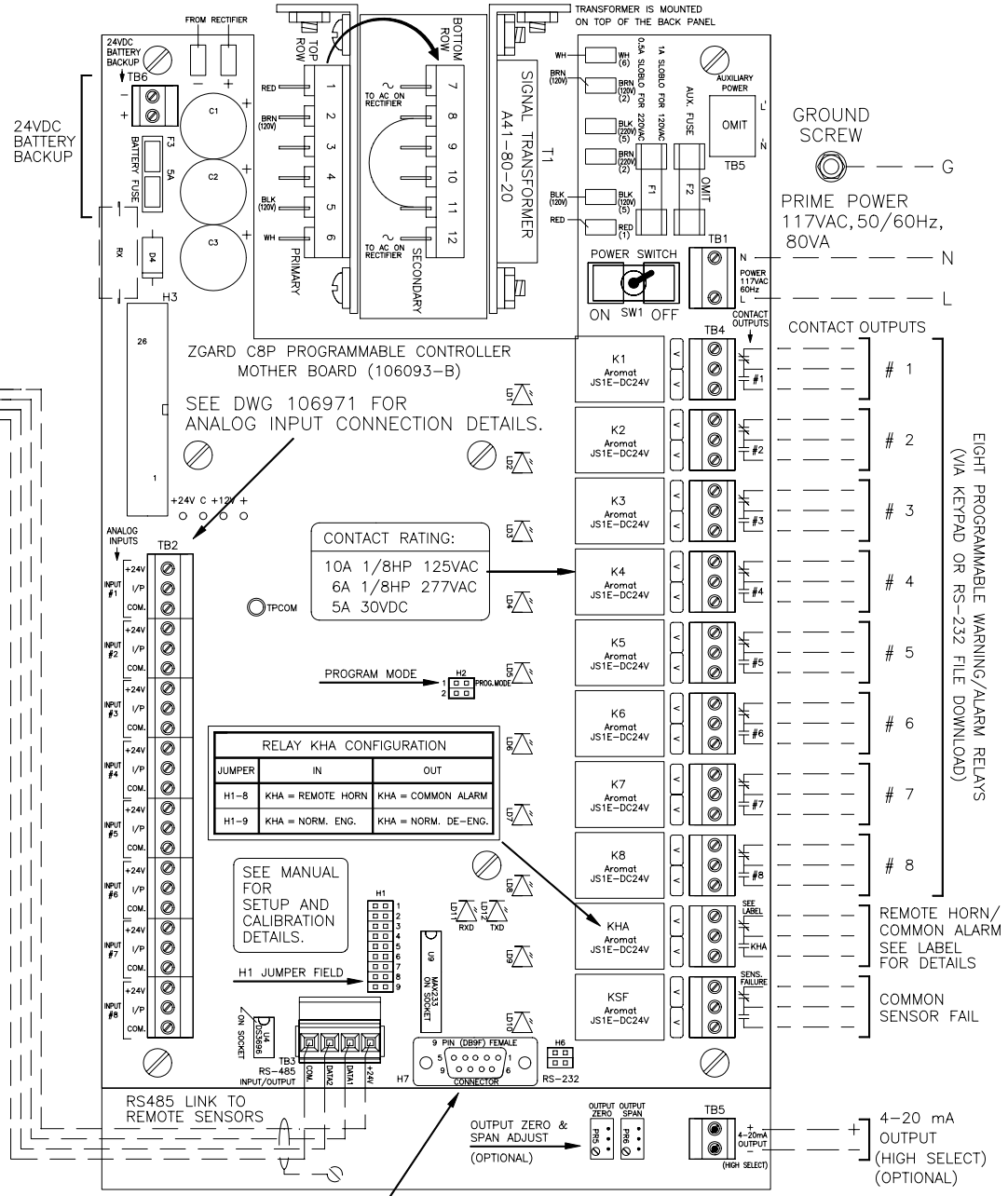

NOTES:
1. DIMENSIONS SHOWN IN INCHES (MILLIMETERS).
2. SYSTEM MAY CHANGE TO IMPROVE PERFORMANCE.

MSA

CHKD:	DATE: Feb. 02/05	DRN: KS

ZGARD C8P Programmable Controller Installation Outline for RS-485 Digital Signal Type Sensors

DWG. NO.: 106972	REV. A